ES-10 E

Field Installation Manual

INDEX

Important Instructions…… 2

Product Specifications……. 3

Unpacking & Mounting …… 4

Connection Type 1 …… 5 – 6

Connection Diagram …….…… 7

Connection Type 2 ……... …… 8

Connection Type 3 ……. 9

Electrical Data Sheet …….…….. 10

Recommended Part List…….…….. 11

ES-10 E

IMPORTANT INSTRUCTIONS

ATTENTION: After completing the installation and testing, it is essential that this booklet is drawn to the attention of the person responsible for its future operation and maintenance and is available for ready reference all the time.

FAILURE TO READ AND FOLLOW ALL INSTRUCTIONS CAREFULLY BEFORE INSTALLATION & OPERATION WILL VOID WARRANTY OF ES-10 E **AND COULD CAUSE SERIOUS PERSONAL INJURY, FIRE HAZARD & ELECTRIC SHOCK MAY LEAD TO DEATH.**

CAUTION:

To prevent electrical shock and/or equipment damage, disconnect electric power to system at main fuse or circuit breaker box until installation is complete.

PRECAUTION:

Do not use on circuits exceeding specified voltage.

Do not short main terminals to test.

Electrical Installation and all components of the installation must be UL listed / UL approved and as per NEC code.

WARNING

Manufactured component parts that can be used in a wide variety of industrial & commercial applications. The selection and application of products remains the responsibility of the equipment designer or end user. Manufactured accepts no responsibility for how its products may be incorporated into final design. Under no circumstances should any product be incorporated into any product or design as the exclusive or sole safety control, all controls should be designed to dynamically fault defect and fail safety under all circumstances. Any warning provided by Manufactured must be passed through to the end user. Manufactured offers a warranty only as to the quality of its product to confirm to the catalog specifications. No other warranty is offered. Manufactured assumes no liability for any personal injury, property damage, losses or claims arising out of the misapplication and Non performance of its products.

PRODUCT SPECIFICATIONS

Model: …… ES-10 (E)

Rated Voltage…… 208V AC

Phases…… Three Phase 120/208V AC

Rated Frequency…… 60Hz

Maximum Current…… 21.6 Amp per phase

Maximum kVar…… 7.8

Maximum Ambient Temperature …… 40^{0}C

Enclosure…… Type 1

Connection Terminal	Connection Type	Size	Wire Type& Temperature	Torque N-m (Lb-in)
T1	Power Circuit	10 AWG, Str.	105^{0}C	1.2(14)
T2,T3 & T4	CT Circuit*	22-18 AWG, Str./Sol.	105^{0}C	0.5(7)
Earthing Terminals	Bonding Circuit	10 AWG, Str./Sol.	105^{0}C	8.5(75)

UNPACKING

1. Un Pack the ES-10 E from cartoon box packing using Plastic Strip Cutter.
2. Recheck and collect the Accessories as per the Packing Slip.
3. Do not use ES-10 E in case of any Breakage or loose connections or Oil Spill inside.

MOUNTING

CAUTION: - Indoor Use Only, Type-1 Enclosure.

1. Choose the dry and Clean Wall to Install the ES-10 E taking care conduit connections from Bottom Side Panel Size is 400 x 300 x 120 mm and weight 13 Kg.
2. Premark the Mounting holes on wall or structure.
3. Make a Drill for the wall plugs.
4. Fix the enclosure on wall with fastners.

ES-10 E

Field Installation Manual

Connection Type # 1

Use this instruction

If 30 Amp circuit breaker is available in customer Main Breaker Panel.

ES-10 E is designed for use with Main Breaker Panel Three Phase 120/208V AC WYE Connection, up to 200 Ampere.

ES-10 E unit should be mounted with four appropriate sized fasteners before connect to Main Breaker Panel.

1.1 Power Connections

1.11 Remove the Panel cover of ES-10 Exposing internal connections.

1.12 Locate Earth Terminal in ES-10 E, connect the earth wire to ES-10 Earth Terminal. Connect the other side of earth wire to main breaker panel ground rod. Ensure all mechanical connections are secure and making full contact.

1.13 Locate existing 3 Pole 30 Amp Circuit Breaker in the Main Breaker Panel.

(a) Connect the wire L1 to Phase 1 of 30 Amp circuit breaker.

(b) Connect the wire L2 to Phase 2 of 30 Amp circuit breaker

(C) Connect the wire L1 to Phase 3 of 30 Amp circuit breaker.

(d) Connect the Neutral from Neutral Bar.

1.14 Qualified Representative must inspect size of cable 10 AWG.

1.15 Connect power cables to T1 Terminal Block of ES-10 E.

Current Sensor Connections

1. Install the one split core sensor on the line side of Customer Sub Panel L1 Phase.
2. Locate current sensor terminal block (S1, S2).
3. Qualified Representative line side of Sub Panel connect to 1mm^2 Cable size of external current sensors.
4. Connect Junction Box to existing 1/2" conduit.
5. Firmly secure current sensor to line side (L1) of main circuit breaker in sub panel or the main feeds if no main breaker existing.

Current sensor 0.333V should be UL approved only.

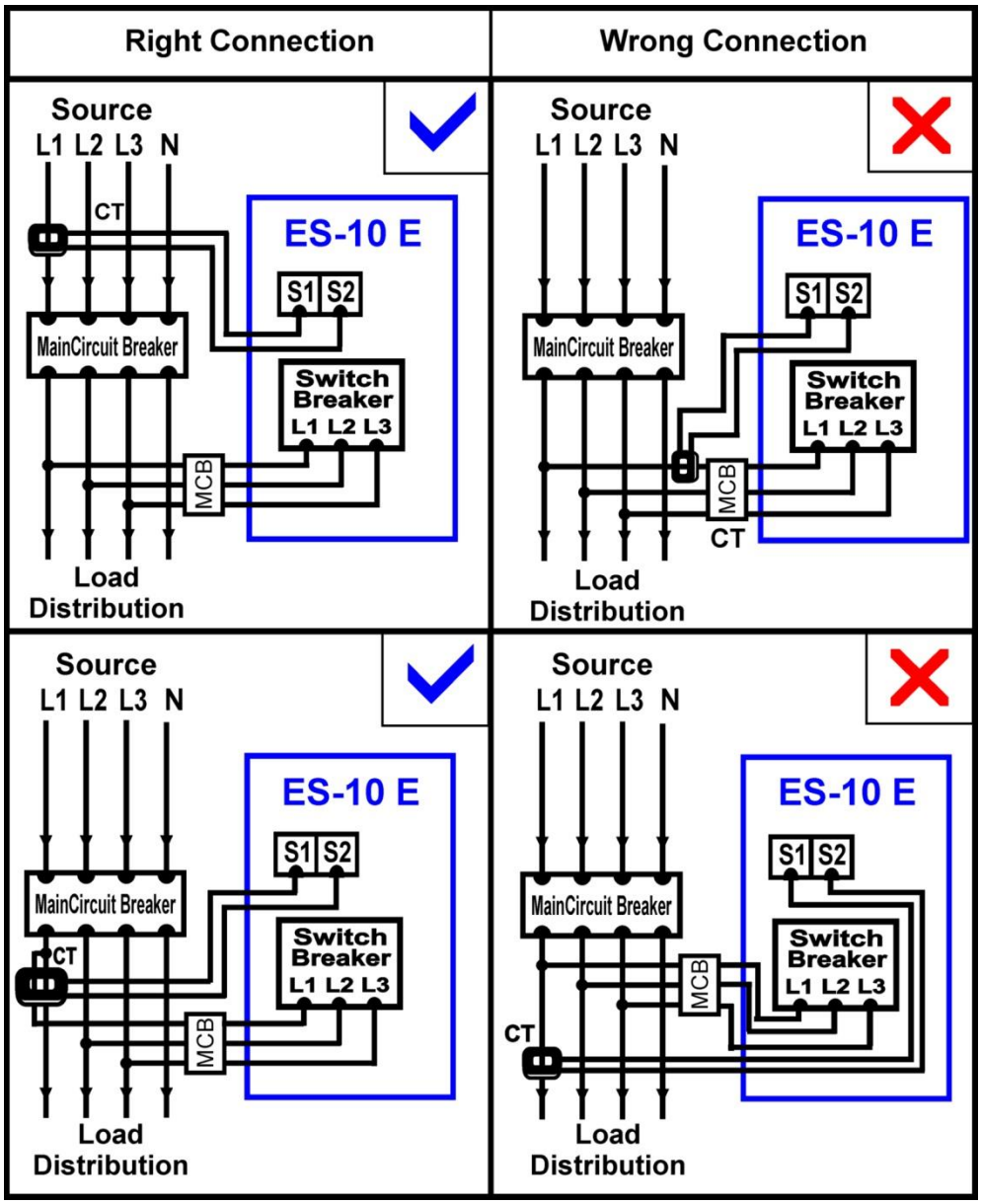

Figure-1

ES-10 E
Field Installation Manual

Connection Diagram

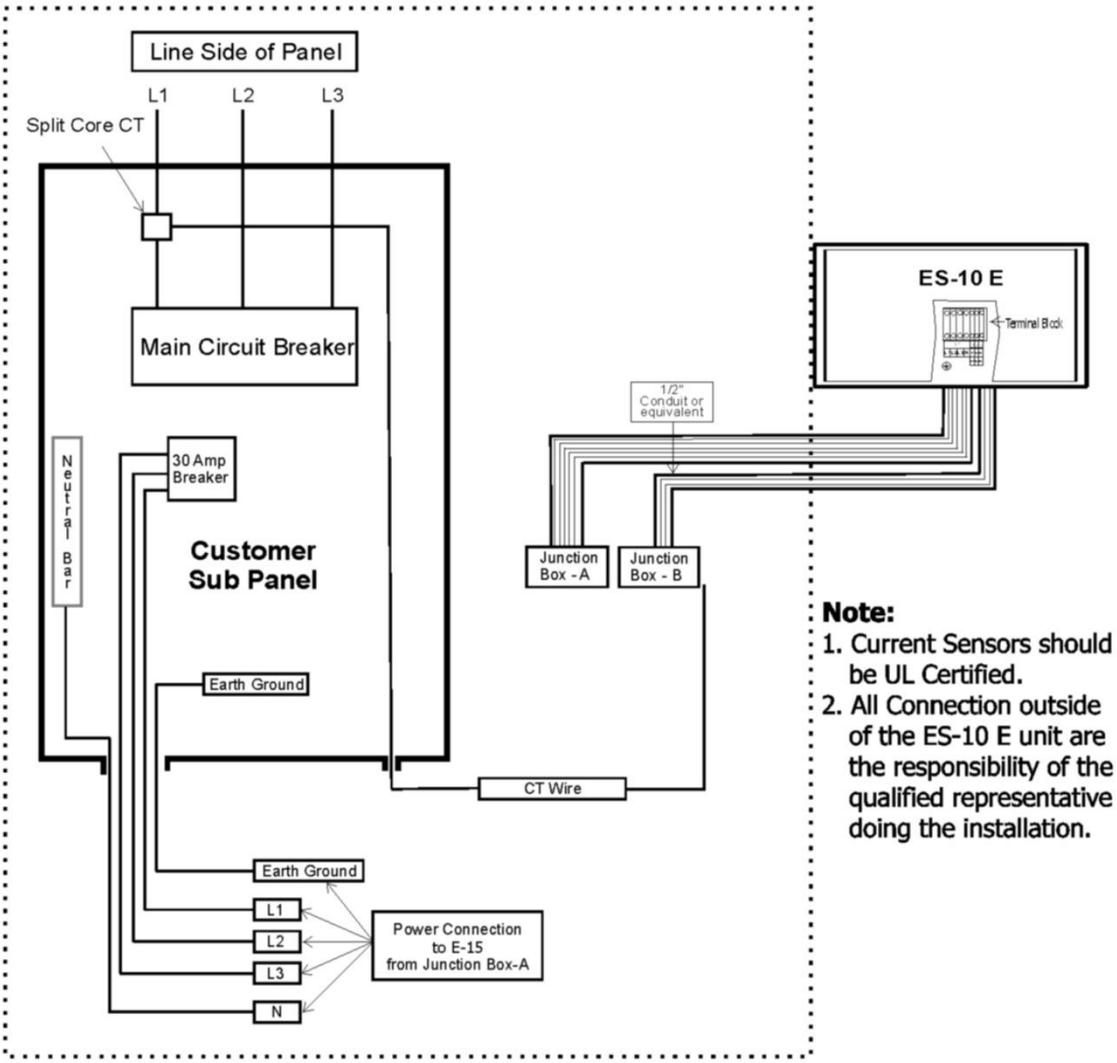

Note:

- All Components used for installation must be UL listed or UL recognized.
- Earth Terminal in ES-10 must be connected to Panel earth rod.
- All external connections and additional work must be performed by qualified representative in accordance with NEC.

Figure-2

ES-10 E

Field Installation Manual

Connection Type#2

Use these instructions

If 30 Amp circuit breaker is unavailable, existing blanks are available.

ES-10 E unit is designed for use with Customer Main Breaker Panel Three Phase 120/208V AC WYE Connection, up to 200 Ampere.

ES-10 E units should be mounted with four appropriate sized fasteners before connect to Main Breaker Panel.

1. Remove Main Panel covers exposing internal wiring and breakers.
2. Remove existing 3 Pole breaker blanks and install new 3 Pole 20 Amp circuit Breakers.
3. For rest of connection follow the Connection type#1 on page 5.

ES-10 E

Field Installation Manual

Connection Type#3

Use this instruction

If 30 Amp circuit breaker is unavailable and require a new disconnect switch or other approved device.

ES-10 E unit is designed for use with Customer Main Breaker Panel Three Phase 120/208V AC WYE Connection, up to 200 Ampere.

Representative must purchase 30 Amp Blade-Fused Disconnect Switch or 30 Amp Circuit Breaker for connection of ES-10 E to Customer Main Breaker Panel.

1. Install new 30 Amp Blade-Fused disconnect or External Circuit Breaker switch to wall or existing backboard. Qualified Representative should note if codes allow for direct connection to bus bars in main breaker panel or requires installation of an additional sub panel.
2. Wire in rigid conduit between customer main breaker panel & external disconnect switch. Connect to ES-10 E using 3/4''conduit.
3. Locate earth ground connection in ES-10 E and connect to grounding bar or to earth ground rod in main breaker panel.
4. For rest of connection follow the Connection type#1 on page 5.

ES-10 E

Field Installation Manual

Model	ES-10 E
Phase Configuration	208V AC 3Phase 4 Wire
Maximum Line Voltage	220 AC
Rating	7.8 kVar
Monitoring	PF,I,V, kVar, kVa,KW, Capacitor Status
Accuracy	1 kVar
Frequency	60Hz
Protection	Capacitor Inbuilt Protection P2, External Circuit Breaker/Fuse.
Lighting Strike	Circuit design with clearance and creep age distance/MOVs adequate MOVs not required.
Circuit breaker Required	30 Amp 3 pole
Low Losses	0.5 Watt per kVar
Dissipation Factor	0.1% at 50 Hz and 25^0C
Human Protection	All High voltage shielded from contact.
Operating temperature range	50^oC Ambient
Dimensions(L X H X D)	400 X 300 X 120 mm Metal Enclosure
Operating Life	Switching tested up to 25,000 times, 6,000 as per UL
Wire Gauge & Rating	10 AWG Str for Power, 22 AWG Str for CT
Unit Weight	10 kg (22 Pounds)

ES-10 E

Field Installation Manual

Recommended Parts List

Item	Make	Part No.	Qnty.
Main Wire 10 AWG Str. 600v	Any *	UL1015	As required
CT Wire 22 AWG Str. 600v	Any *	UL1015	As required
Bonding Wire 10 AWG Str. 600v	Any *	UL 1015	As required
CT (Current Sensor)	Megnelab	SCT-0750-050	1
Dowel Plug Size M8	Any	---	4
Screw 50 mm Size M8	Any	---	4
1/2” Conduit Connector	Any *	---	4
1/2” Tube/Conduit	Any *	---	As required
3/4” Conduit Connector	Any *	---	4
3/4” Tube/Conduit	Any *	---	As required

***All the Parts used in installation must be UL recognized or UL listed.**

NOTE

1. Installation of material and workmanship at the customer’s Main Breaker Panel shall be the responsibility of the qualified Electrician in accordance with NEC. Any and all connections exterior to the ES-10 E unit shall be the responsibility of the qualified Electrician.